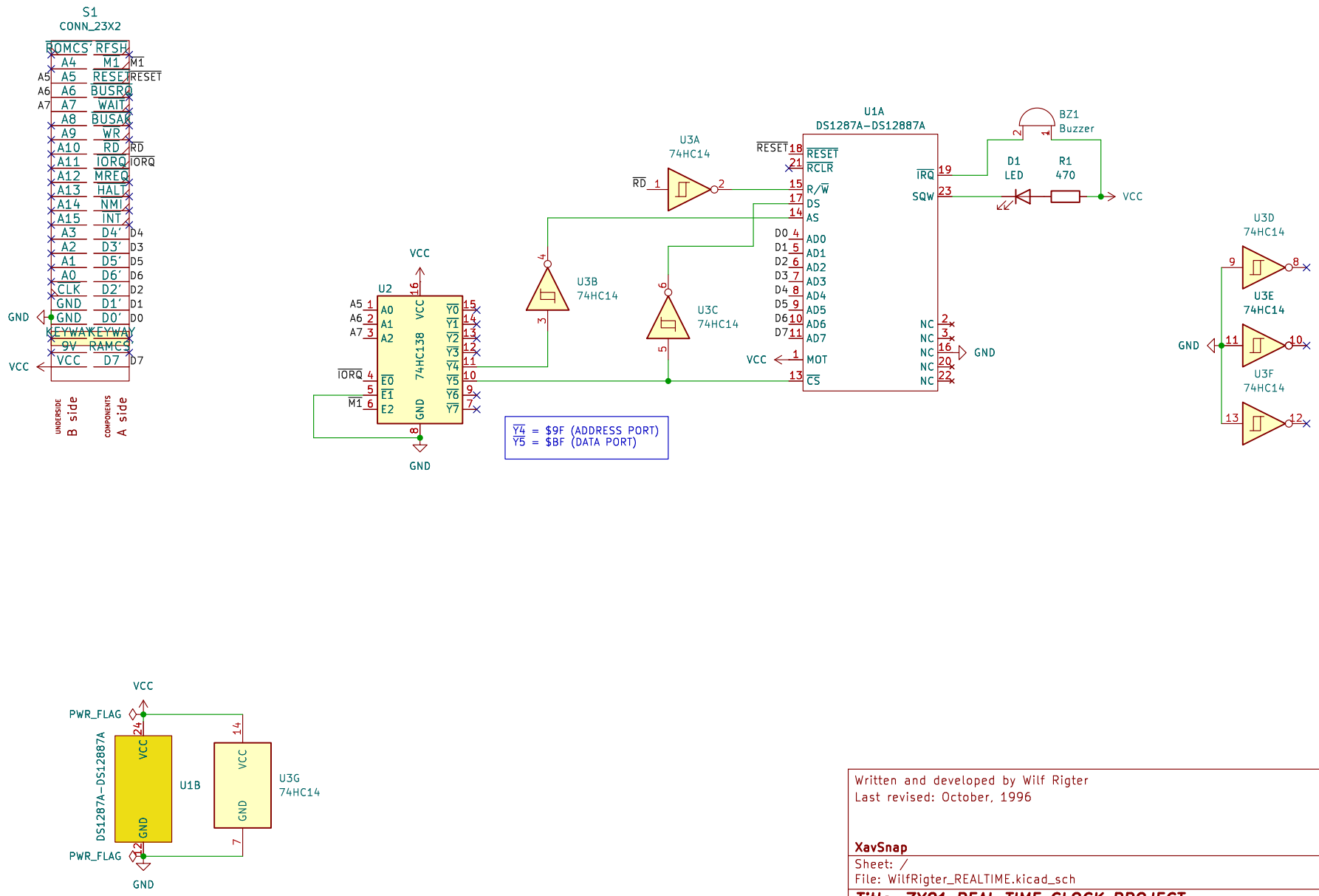

Written and developed by Wilf Rigter
Last revised: October, 1996

XavSnap

Sheet: /
File: WilfRigter_REALTIME.kicad_sch

Title: ZX81 REAL TIME CLOCK PROJECT.

Size: A4	Date:	**Rev:**
KiCad E.D.A. 8.0.5		Id: 1/1